Section view J-J
Scale: 1:2

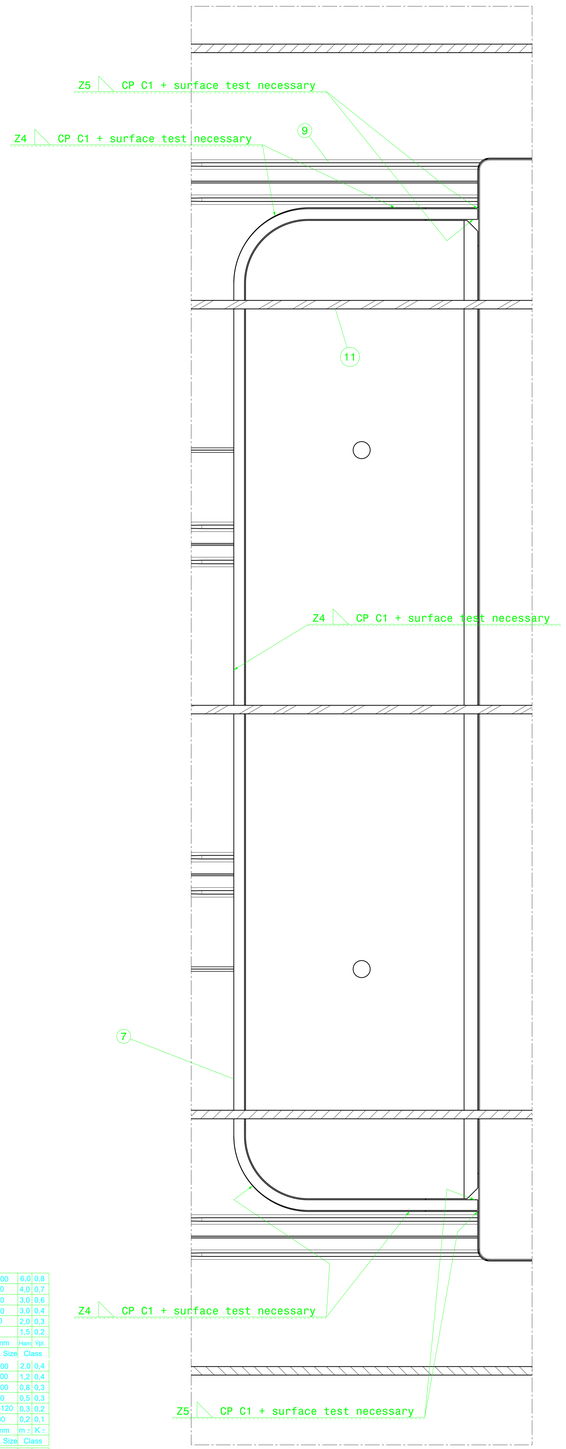

Section view I-I
Scale: 1:2

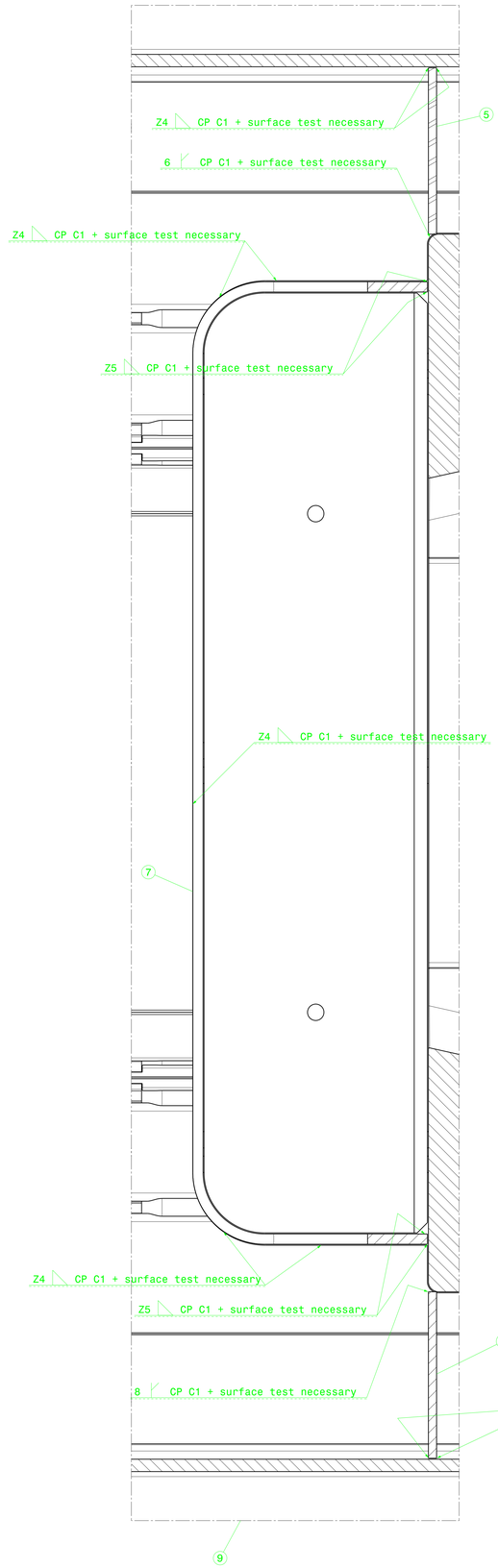

Detail A
Scale: 1:10
Typical

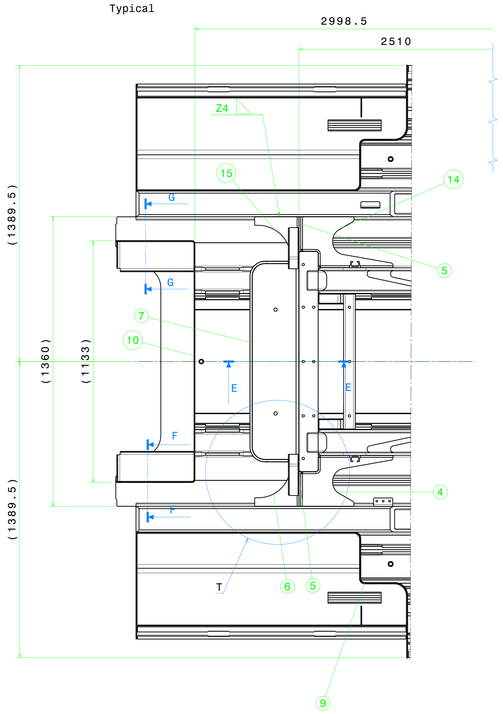

Section view E-E
Scale: 1:2

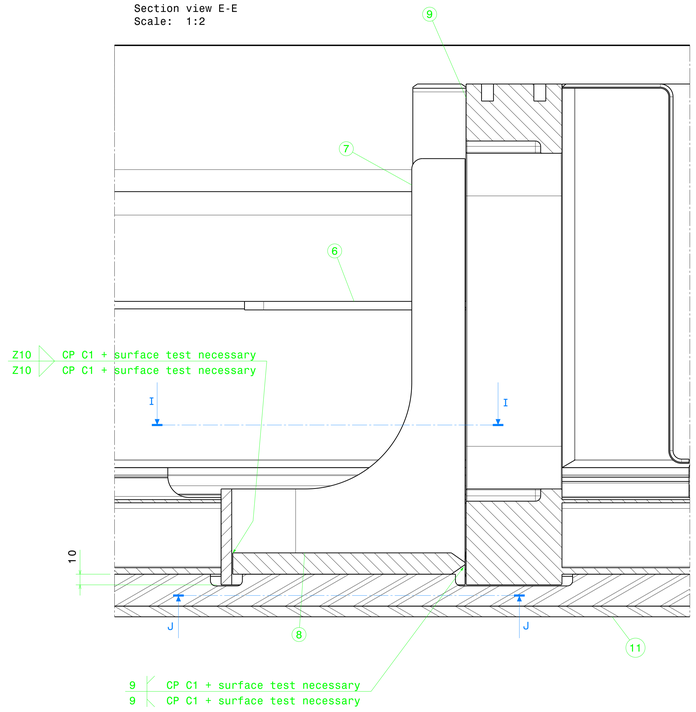

Section view G-G
Scale: 1:2

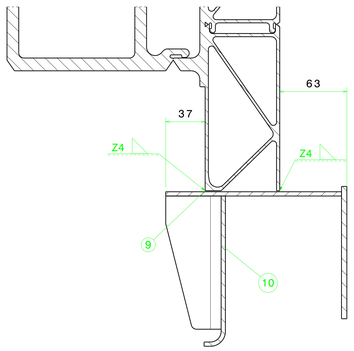

Section view F-F
Scale: 1:2

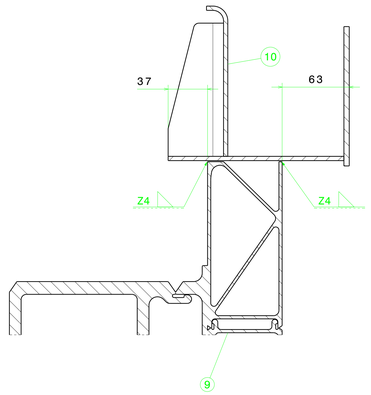

* Installed using the Adhesive LOCTITE 638 GREEN

ISO 2768 General Tolerances		
<1000	6,0	0,8
<630	4,0	0,7
<400	3,0	0,6
<250	3,0	0,4
100	2,0	0,3
40	1,5	0,2
L mm	Hem	Ypl.

ISO 13920 Welded Construction		
Nom. Size	Class	
<4000	2,0	0,4
<2000	1,2	0,4
<1000	0,8	0,3
<400	0,5	0,3
30-120	0,3	0,2
2-30	0,2	0,1
L mm	m ±	K ±

ISO 8015 Castings	
Nom. Size	Class
>20000	9,0
<20000	8,0
<16000	7,0
<12000	6,0
<8000	5,0
<4000	4,0
<2000	3,0
<1000	2,0
<400	1,0
30-120	1,0
2-30	1,0
L mm	A ±
Nom. Size	Class

EN 22553 Welding Symbols		
Nom. Size	Class	
<1000	6,0	0,8
<630	4,0	0,7
<400	3,0	0,6
<250	3,0	0,4
100	2,0	0,3
40	1,5	0,2
L mm	Hem	Ypl.

ISO 2768 General Tolerances		
>20000	9,0	8,0
<20000	8,0	7,0
<16000	7,0	6,0
<12000	6,0	5,0
<8000	5,0	4,0
<4000	4,0	3,0
<2000	3,0	2,0
<1000	2,0	1,5
<400	1,0	1,0
30-120	1,0	0,5
2-30	1,0	0,5
L mm	A ±	E ±
Nom. Size	Class	

EN 15085-2 Certification Level	
CL1 ☐	CL2 ☐
CL3 ☐	CL4 ☐

ISO 2768		
f ☐	m ☐	H ☐
A ☐	B ☐	C ☐
Lr2 ☐	Sr2 ☐	Sr3 ☐

ISO 13920		
A ☐	B ☐	C ☐
Lr2 ☐	Sr2 ☐	Sr3 ☐

ISO 12708		
E ☐	F ☐	

							3870,2
No	Parça Adı / Designation Name of Item	Adet / Qty.	Resim No / Norm / Drawing No / Norm	Malzeme / Material	Ölçü / Dimension	Ağırlık / Weight (Kg)	
	ISO 1302 ISO 8015	EN 22553	General Tol.	ISO 2768	m(K)	H(K)	A(K)
	EN 15085-2 Certification Level		Weld Pro.	ISO 13920	A ☐	B ☐	C ☐
			Cast Steel	ISO 12708	Lr2 ☐	Sr2 ☐	Sr3 ☐

Approved	E.M. ERDOĞAN	Scale	1:25
Checked	Y. KARABEL		
Prepared	M.K. TAŞ		

TYP

Complete_Underframe

-

TURASAS
Türkiye Rayli Sistem Araçları San. A.Ş.

FT24.03.01.00000

Technical Specifications				
Technical Document				
Fixture/Mould Asset ID.				
Coating/Heat Tre./Roughness		R01	Drawing updated.	26/03/2026	E.M. ERDOĞAN
Paint/Color	-	Modf. No	Modification Description	Date	Sign.

Date: 02.07.2024 | Sheet : 2/4 | Size: A0 | Rev: 01

Reproduction, dissemination or use of this document or its all contents in any form without the prior written permission of TURASAS is prohibited. Offenders will be liable for the payment of damages. All rights reserved in the event of the grant of a patent, utility model or registration of industrial design / registration.